EQ-4101
様式-26

HOSHIZAKI

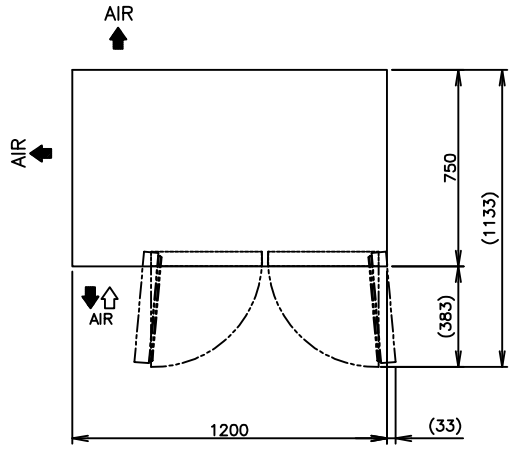

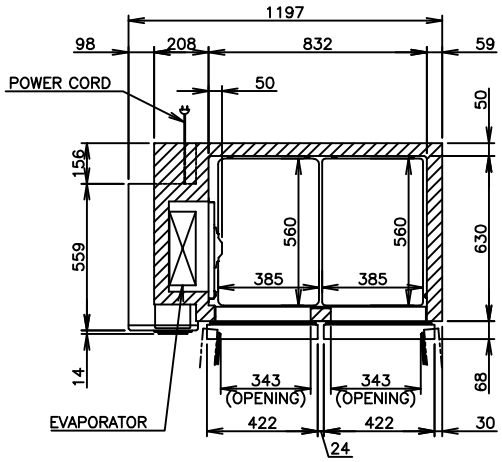

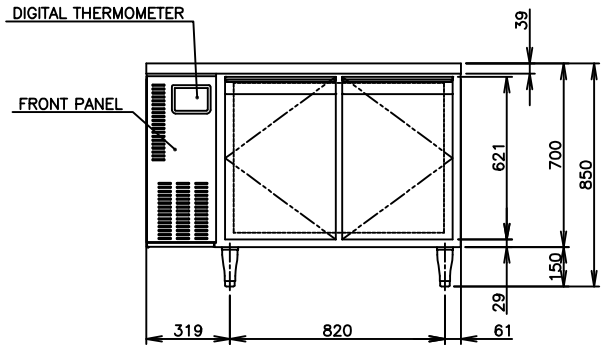

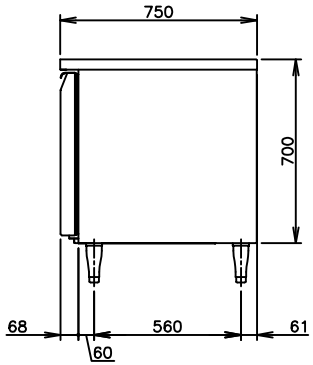

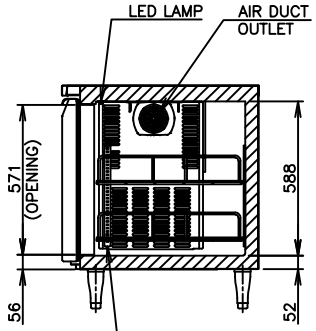

ITEM	HOSHIZAKI UNDERCOUNTER REFRIGERATOR
MODEL	RTV-128A
△1 POWER SUPPLY	SINGLE PHASE, 220-240V AC, 50HZ
RATED CURRENT	1.7 AMPS
△1 RATED POWER	340 W (HEATER 36.5W)
HEAT REJECTION	0.712 kW
POWER CORD	10 AMPS / 3 METER
EFFECTIVE CAPACITY	296 L
OUTSIDE DIMENSIONS	1200MM(W)X750MM(D)X850(-870)MM(H)
INSIDE DIMENSIONS	832MM(W) X 630MM(D) X 588MM(H)
EXTERIOR	SS 430 HAIRLINE NO 4 FINISH, GALVANIZED STEEL POWDER COATED (REAR/BOTTOM)
INTERIOR	SS 430 HAIRLINE NO 4 FINISH
INSULATION	POLYURETHANE FOAM (CFC FREE)
INSULATION FOAM BLOWING AGENT	CYCLOPENTANE
REFRIGERATION SYSTEM	FORCED AIR CIRCULATION
DEFROST SYSTEM	IN COMPRESSOR OFF CYCLE
△1 COMPRESSOR	HERMETIC 477.5 W
CONDENSER	FORCED (WIRE ON TUBE)
EVAPORATOR	FORCED (FIN & TUBE)
REFRIGERANT/ CHARGE	R290 / 70 Gram
TEMP. CONTROL	ELECTRONIC ADJUSTABLE FROM -2°C TO 12°C
DEFROST CONTROL	BY TEMPERATURE CONTROLLER
ELECTRIC CIRCUIT PROTECTION	NON RESETTABLE FUSE (GLASS FUSE) 10 AMP
COMPRESSOR PROTECTION	MOTOR PROTECTOR
LEG	PLASTIC ADJUSTABLE 150 TO 170MM
SHELF	4 PCS
WEIGHT	NET: 98 KG (GROSS: APPROX 117 KG)
PACKAGE	CARTON (WOODEN PALLET) 1270MM (W) X 820MM (D) X 875MM(H)
ASSESSORIES	SHELF CLIPS
OPERATING CONDITIONS	AMBIENT TEMPERATURE : 5 - 43°C VOLTAGE RANGE RATED VOLTAGE ±6%
CABINET LAMP	LED STRIP TYPE 700MM, 6W, DC24V
LAMP DRIVER	ELECTRONIC DRIVER 8.5W

*WE RESERVE THE RIGHT TO MAKE CHANGES IN SPECIFICATIONS AND DESIGN WITHOUT PRIOR NOTICE

1. INSTALL THE PRODUCT PROPERLY IN ACCORDANCE WITH THE INSTRUCTIONS ON LOCATION, ELECTRICAL CONNECTIONS STATED IN THE INSTRUCTION MANUAL PROVIDED.
   ALLOW 10MM EXTRA SPACE AT THE INSTALLATION SITE TO MEET ANY INSTALLATION REQUIREMENTS (ADDITIONAL SPACING IS ALSO REQUIRED FOR PROPER AIR FLOW AND PIPE CONNECTIONS).
2. THE HEAT REJECTION IS BASED ON THE REACHED PULL DOWN TEMPERATURE AT AMBIENT TEMPERATURE OF 43°C AND POWER SUPPLY OF 230VAC 50HZ.
   THE AMPERAGE AND ELECTRIC CONSUMPTION ARE BASED ON MEASUREMENT AT AMBIENT TEMPERATURE OF 43°C AND POWER SUPPLY OF 230VAC 50HZ.
3. TOLERANCE ON WEIGHT IS ±5 KG
4. PRODUCT CODE: KT01

HOSHIZAKI UNDERCOUNTER REFRIGERATOR RTV-128A

APPROVED	CHECKED	DESIGNED	DRAWN	SCALE	
NGOC SANG	NGOC SANG	BA HUY	BA HUY	1/20	TRIGONOMETRY

NGOC SANG	BA HUY	△1	2026.01.30	DATE	DRAWING NO.	SYMBOL
APPROVED	DESIGNED	SYMBOL	DATE	2025.12.19	D44228	△1

000520
施行